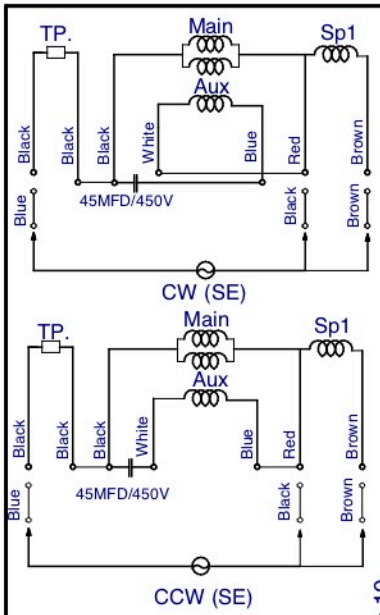

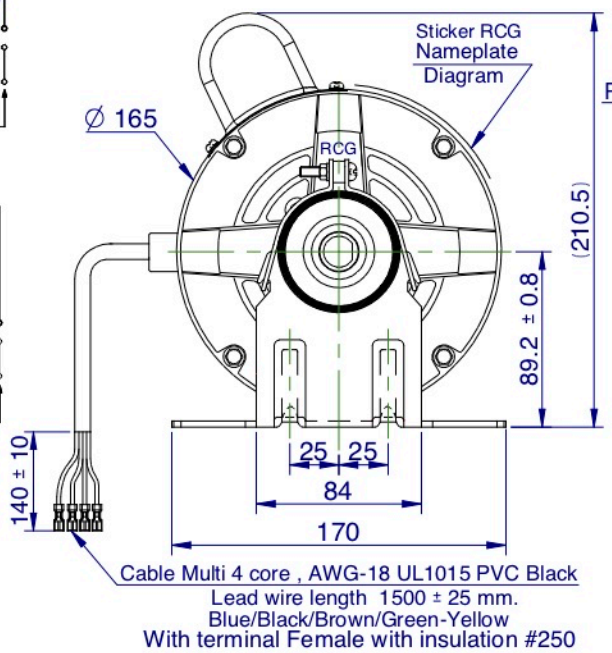

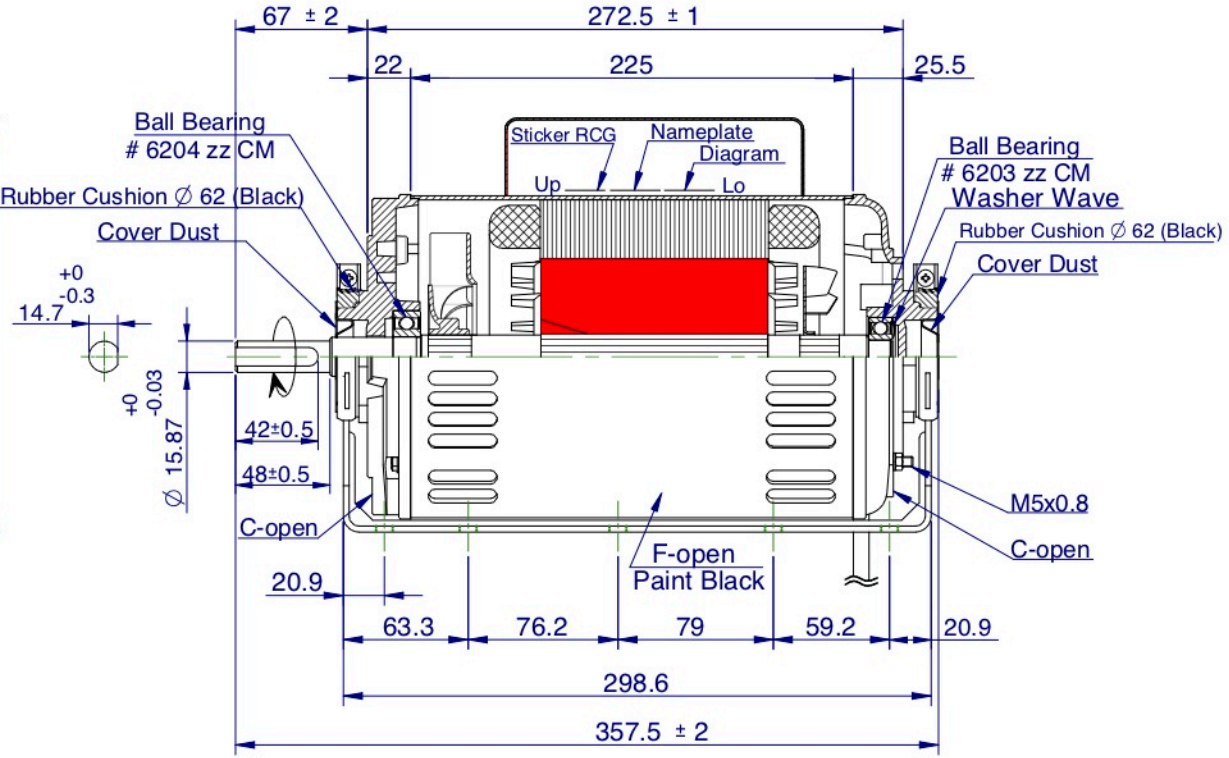

RCG
ELECTRICMOTORGROUP

RCT90-15004S-ODP-A02

1500/500W , 4P, 8.5Amp	Cap.	45 mfd	Frame	56
240V , 1Ph , 50Hz	Rating	Cont	Mounting	Cradle
Rpm 1400/940	Ins. Class	B	Serial No. DDMMYYxxxx	

WARNING
MOTOR FITTED WITH INTERNAL AUTO RESET OVERLOAD AND MAY RESTART WITHOUT WARNING

NAMEPLATE

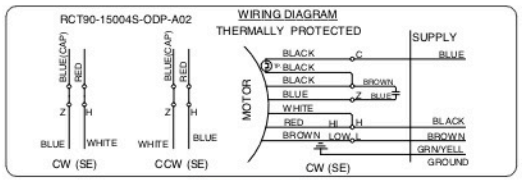

DIAGRAM

DATA TEST NO.		W443-2246-SL	
APPLICABLE MODEL		PM3200047	
SPECIFICATION	NO. OF PHASE	1 PHASE	
	NO. OF POLE	4 P.	
	RATED RPM. 50Hz	1400/940	
	RATED RPM. 60Hz	---	
	VOLTAGE	240	V.
	CURRENT	10.82	A.
	OUTPUT	1725	W.
WINDING RESISTANCE (REF. 20°)	M COIL	1.80	Ω
	S COIL	3.67	Ω
	SP1 COIL	3.75	Ω
	SP2 COIL	----	Ω
THERMAL PROTECTOR		T16094-11 135°C Refer P/N.R330-8514	
INSULATION CLASS		B	
METHOD OF COOLING		DPFC	
DEGREE OF PROTECTION		IP20	
WEIGHT		21.78	KGS.

STICKER RCG

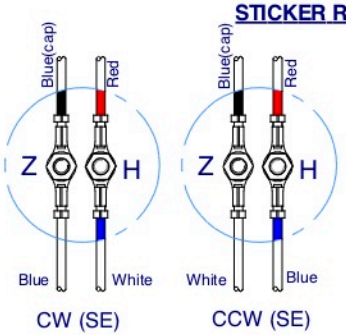

BOARD TERMINAL

Notes :
1. After the motor is complete, applied rust proof oil (Caltex oil) at shaft end.
2. The tensile strength of each lead wire at least 4 Kgs.
3. The runout of the shaft end circumference 0.08 mm.

THIS DRAWING MAY BE USED IN WHOLE OR PART ,PROVIDED THE PIONEER MOTOR NAME & LOGO ARE VISIBLE IN ANY REPRODUCTION.

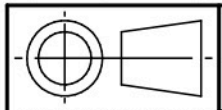

THIRD ANGLE PROJECTION

NON SCALES

FINISH:	DESCRIPTION:		REFER TO :
ASSEMBLY	MOTOR OUTLINE		QR2875 ECN No.8915,8942
ROYCECROSS	Q'TY 1	APPLICATION INDOOR MOTOR	Group Code: FF90/100B