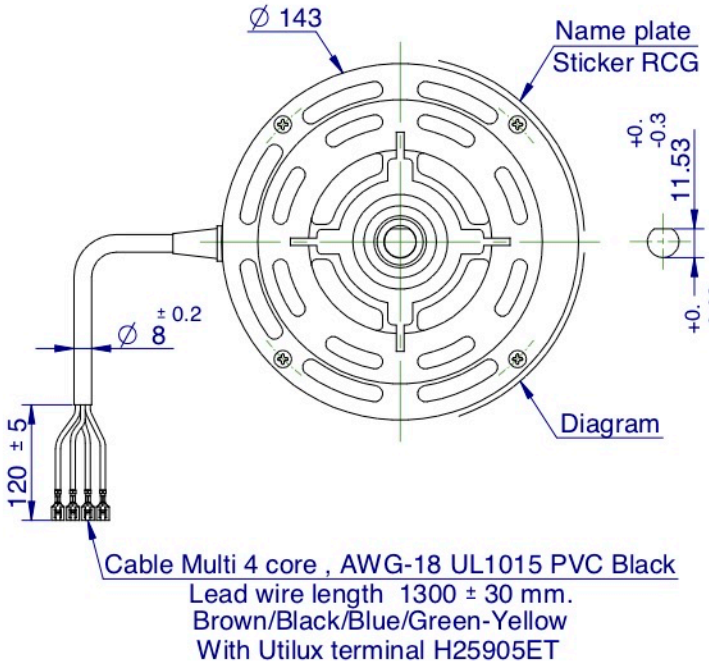

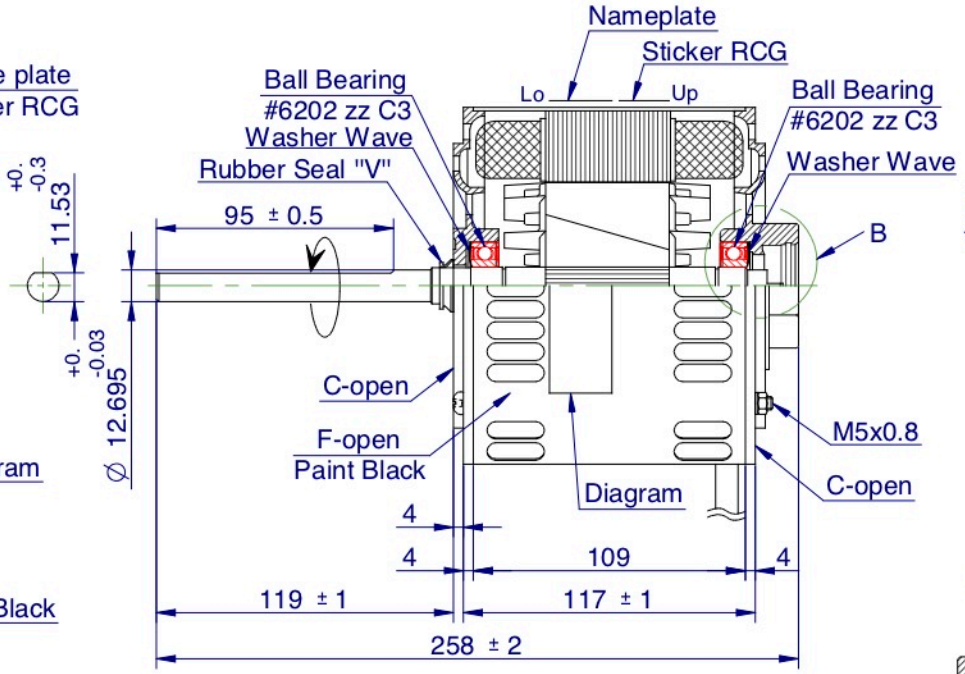

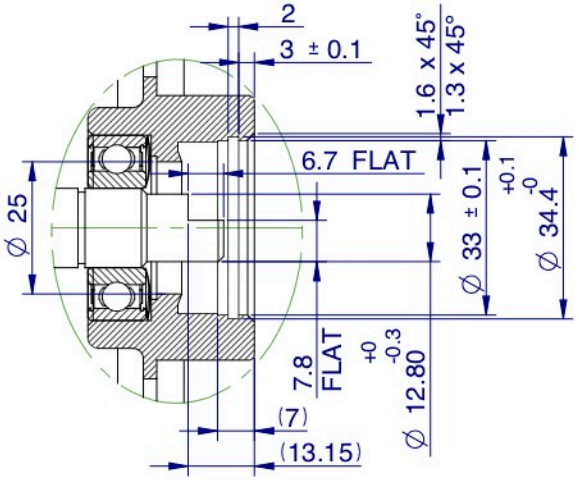

SHAFT EXTENSION NDE - B

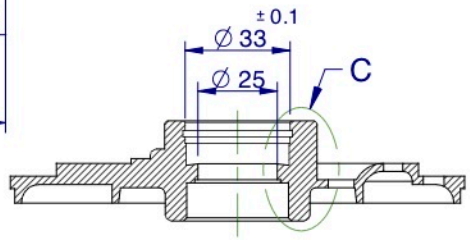

SECTION COVER END(LE)

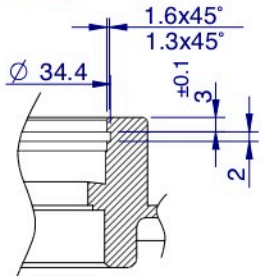

DETAIL - C

RCG
ELECTRICMOTORGROUP

STICKER RCG

RCT85-3154S-ODP-B02BS-1					
0.315kW , 4P , 2.4Amp	Cap.	8 mfd	Frame	48
240V , 1Ph , 50Hz	Rating	Cont	Mounting	Nil
Rpm 1400	Ins. Class	B	Serial No. xxxxxxxxxx	

NAMEPLATE

WARNING

MOTOR FITTED WITH INTERNAL AUTO RESET OVERLOAD AND MAY RESTART WITHOUT WARNING

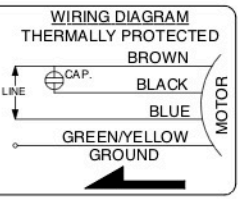

DIAGRAM

THIS DRAWING MAY BE USED IN WHOLE OR PART ,PROVIDED THE PIONEER MOTOR NAME & LOGO ARE VISIBLE IN ANY REPRODUCTION.

DATA TEST NO.			W443-2134-SL
APPLICABLE MODEL			PM3102369
SPECIFICATION	NO. OF PHASE		1 PHASE
	NO. OF POLE		4 P.
	RATED RPM.	50Hz	1400
		60Hz	---
	VOLTAGE		240 V.
	CURRENT		2.40 A.
	OUTPUT		315 W.
WINDING RESISTANCE (REF. 20°)	M COIL		10.88 Ω
	S COIL		42.30 Ω
	SP1 COIL		--- Ω
	SP2 COIL		--- Ω
THERMAL PROTECTOR			17AM - 150°C Refer P/N.R330-0035
INSULATION CLASS			B
METHOD OF COOLING			A.O.M.
DEGREE OF PROTECTION			IP20
WEIGHT			--- KGS.

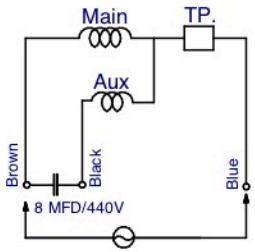

Notes :
1. After the motor is complete, applied rust proof oil at shaft end.
2. The tensile strength of each lead wire at least 4 Kgs.
3. The runout of the shaft end circumference 0.08 mm.
4. Motor can use triac control

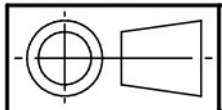

THIRD ANGLE PROJECTION

NON SCALES

FINISH:	DESCRIPTION:			REFER TO :
ASSEMBLY	MOTOR OUTLINE			ECN No.8354 ECN No.8416
ROYCECROSS	Q'TY 1	APPLICATION INDOOR MOTOR		Group Code: FF85B