Contents

Motor Range

Single Phase Motor, Type CSR
Series = BEGY
Frame size = 71 – 80
Output = 0.18 – 1.1kW

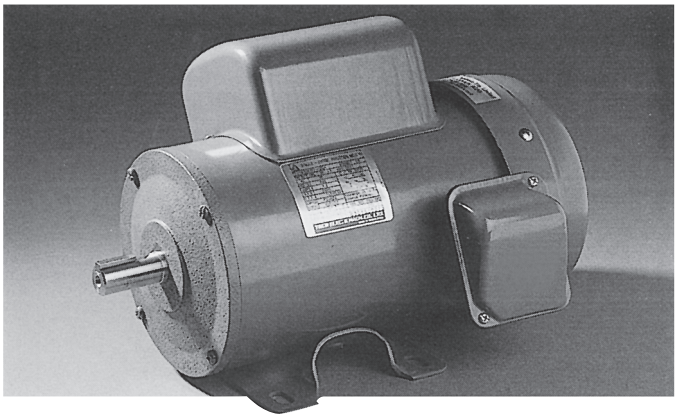

Single Phase Motor, Type CSR
Series = BECY
Frame size = 90 – 132
Output = 1.1 – 7.5kW

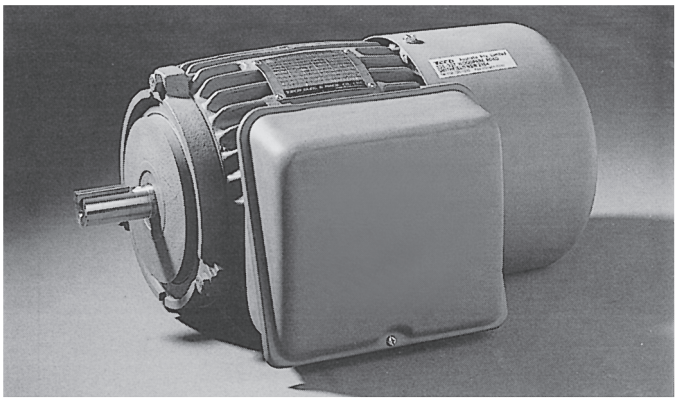

Single Phase Motor, Type CSIR & CSR
Series = B56
Output = 0.25 – 0.75kW

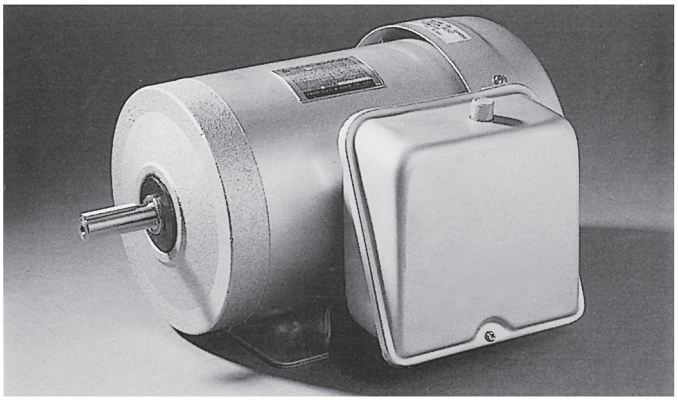

Standard Specification

RATING	Voltage	Rated Voltage 240V/480V
	Frequency	Rated Frequency 50Hz
	Output Range	0.18kW – 7.5kW
	R.P.M. (Syn.)	3000R.P.M. (2 Pole) 1500R.P.M. (4 Pole)
	Duty	S1 (Continuous)
	Frame Size	71 – 132M
	Enclosure	TEFC Totally Enclosed Fan Cooled
	Degree of Protection	IP 44 (Totally Enclosed, Splash Proof)
	Method of Cooling	IC 0141 External Fan. Surface Cooling
	Mounting	IM 1001 Foot Mounting IM 3001 Flange Mounting IM 2001 Foot & Flange Mounting
APPLICATION	Power Condition	Voltage ± 10%, Frequency ± 5%.
	Environment Conditions	Area = Non Hazardous. Ambient Temperature –10°C to 40°C Relative Humidity = Max. 90%. Altitude = Max. 1000m (3300ft)
	Drive Method	Belt Drive or Direct Coupling
	Direction of Rotation	Bi-Directional
	Method of Starting	D.O.L. (Direct-On-Line) Full Voltage
CONSTRUCTION	Frame	71 – 80 Rolled Steel 90 – 132 Cast Iron
	Endshield	71 – 80 Alum. Alloy with Steel Insert, except Frame 80 DE (Cast Iron) 90 – 132 Cast Iron
	External Fan	Polypropylene
	Fan Cover	Pressed Steel
	Bearing	Single Row Deep Groove Ball Bearing – Double Shields, Pre-Greased
	Terminal Box	Pressed Steel, with Clearance Hole Cable Entry
	Stator Winding	Polyester Enamelled Copper Wires, Random Wound
	Insulation System	Class F (Operating Temp. 155°C – Temp. Rise 105°C)
	Rotor	Squirrel Cage, Alum. Conductor with End-Ring
	Painting	Phenolic Base Paint, Laquer Surface Finish 71 – 80 Munsell 2.5G 6/3 (Deep Green) 90 – 132 Munsell N5.0 – SG (Grey)
	Name Plate	71 – 80 Aluminium 90 – 132 Stainless Steel
	Bolts	ISO Metric System (Except B56)
PERFORMANCE	Temperature Rise	Not Exceeding 90°C by Resistance Method
	Over Speed	125% Syn. R.P.M. for one min.
	Over Torque	160% Rated Torque for 15 sec.
	Capacitor Start	Series BEGY/BETY, BECY/BEDY } Capacitor Start – Capacitor Run Series B56 Cap. Start – Cap. Run and Cap. Start – Induction Run
	Standards	Comply with relevant IEC & AS Standards

Single Phase Induction Motor

TECO Single Phase Induction Motors are designed, manufactured and tested to comply with International and Australian Standards. The motors described in this catalogue are of proven design with optimised performance and robust construction providing increased reliability, efficiency of operation and longer life. TECO motors are built to meet demands in all forms of application.

Ratings and Standards

Connection

240 Volts Single Phase 50Hz. for motors of 0.18kW to 7.5kW. 240/480 Volts Single Phase 50Hz. from 1.5 to 7.5kW. The motors will produce their rated performance with voltage +/–5 per cent.

Rating

The motors are continuously rated at name plate current defined as S1 to AS 1359 within an ambient temperature –10 to 40ºC, and altitude below 1000 metres.

For operation at higher ambients and/or altitudes, the output rating must be adjusted accordingly. Contact your nearest TECO office.

Performance

Standard motors are designed with performance in accordance with relevant standards within IEC34 and AS 1359 & 1360.

Direction of rotation

The standard motors are suitable for operation in either direction of rotation. Reversing the direction is by changing the connection link within the terminal box. See page 6.

Mounting

Motors are available in the following mounting disposition:

Foot	IM1001, 1011, 1031, 1051, 1061, 1071
Flange	IM3001, 3011, 3031
Foot and Flange	IM2001

According to AS 1359 and IEC 72

Construction

Frame

Two pole motors up to 1.1kW and four pole motors up to 0.75kW and Series B56 motors are of rolled steel construction. Motors of larger size are of high grade cast iron with longitudinal cooling fins and integrally cast feet, to offer maximum stability.

Fan and Fan Cowl

All motors are fitted with bi-directional cooling fans of polypropylene which are non corrosive. The fan cowl is of pressed steel construction painted internally and externally to resist corrosion.

Bearings and Lubrication

The motors are provided with double shielded and pre-packed ball bearings sealed against dust and moisture, requiring no further attention for the life of bearing.

Stator Winding and Insulation System

Stator laminations are built of high grade, insulated, cold-rolled electromagnetic steel for high efficiency. All quality components in the insulation system fully meet the requirements for Class 'F' providing thermal capacity and are resistant to the effects of tropical and high humidity conditions.

All motors incorporate a centrifugal switch between the starting and running windings.

Rotor Assembly

The rotor conductors and end rings are one piece pressure die cast aluminium which is practically indestructible in normal application. All rotating parts are dynamically balanced to minimise vibration.

Terminal Box

All motors are provided with a pressed steel terminal box enclosure which is located at the right hand side of the motor, looking at the drive shaft end. Terminal box left hand side is optional. Terminal connections are shown on page 6.

Capacitors

Series BEGY 0.25kW to 1.1kW (2P) and Series BECY 1.1kW (4P) to 7.5kW are capacitor start capacitor run, providing high starting torque with optimum running performance.

B56 frame motors 0.75kW 2 pole and 0.25 – 0.55kW 4 pole are capacitor start – induction run and 0.75kW 4 pole are capacitor start – capacitor run.

Paint Finish

All castings and steel parts have a phenolic base prime coat and a finish coat of synthetic enamel paint.

Classification

TECO Single Phase Motors are classified in accordance with the method of starting and are usually referred to by descriptive names of these methods as listed below:

CSIR Motor = Capacitor Start – Induction Run
CSR Motor = Capacitor Start – Capacitor Run

Selection of Motors

Selection of the appropriate Motor is based upon the starting and running torque requirements of the load, the duty cycle, and the limitations on starting running current from the power supply.
To minimise the cost, the application engineer selects the required power rating and performance of the motor that provides the basic torque requirements. TECO has the flexibility and capability to manufacture single phase motors for various applications.

Starting and Running Characteristics

CSIR Motors

CSIR Motors with high starting torque and medium starting current are suitable for heavier duty applications and the power supply with higher voltage variation.

Connection Diagrams

C.C.W. Rotation	C.W. Rotation

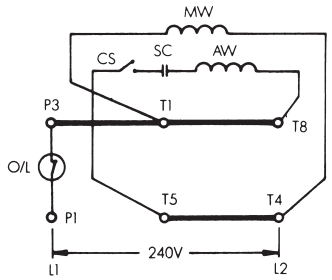

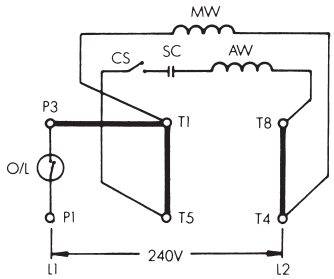

CSR Motors

CSR Motors combine the high starting torque and good running performance and have advantage over CSIR Motors.
The cost of the motors is related to the performance, so the CSR Motor is usually used only for the application of integral rating with heavier starting torque requirements.

C.C.W. Rotation	C.W. Rotation

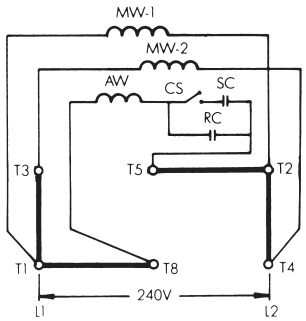

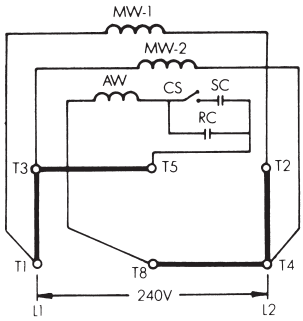

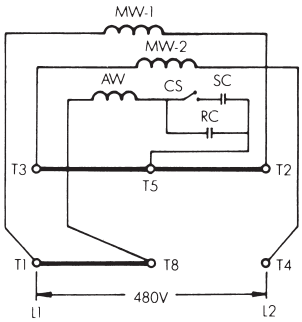

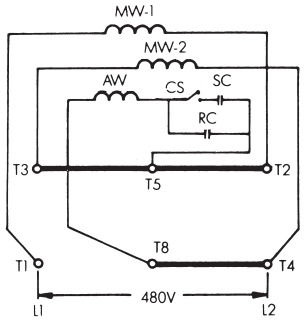

Note: CSIR and CSR Motors are stocked by TECO Australia.
Single voltage motors are normally fitted with thermal protectors.

Schematic Drawings

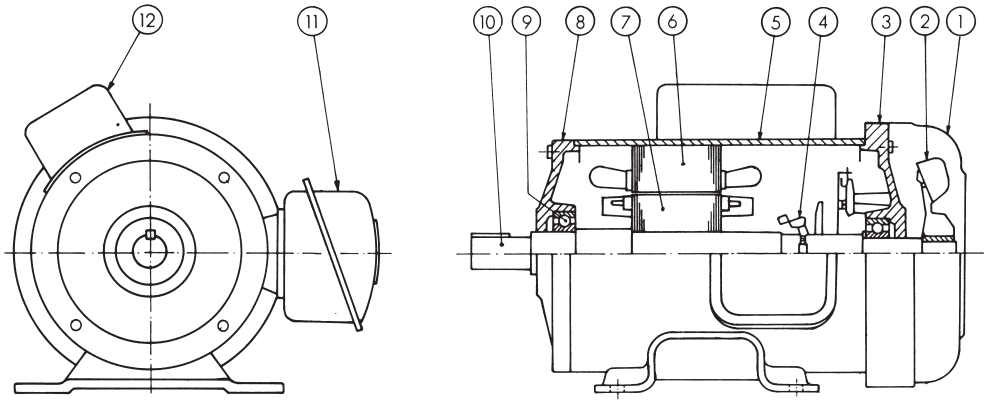

Frame 71 – 80

1 Fan Cover
2 Fan
3 End shield N-End
4 Centrifugal Switch
5 Stator Frame
6 Stator
7 Rotor
8 End shield D-End
9 Bearing
10 Shaft
11 Terminal Box
12 Capacitor Box

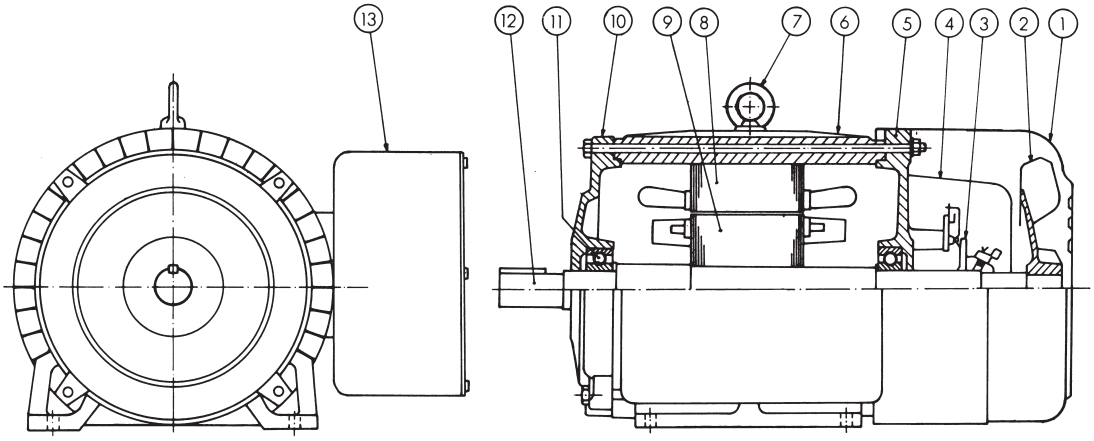

Frame 90 – 132

1 Fan Cover
2 Fan
3 Centrifugal Switch
4 Centr. Switch Cover
5 Endshield N-End
6 Stator Frame
7 Eye Bolt (100-132)
8 Stator
9 Rotor
10 Endshield N-End
11 Bearing
12 Shaft
13 Terminal Box

Terminal Connection

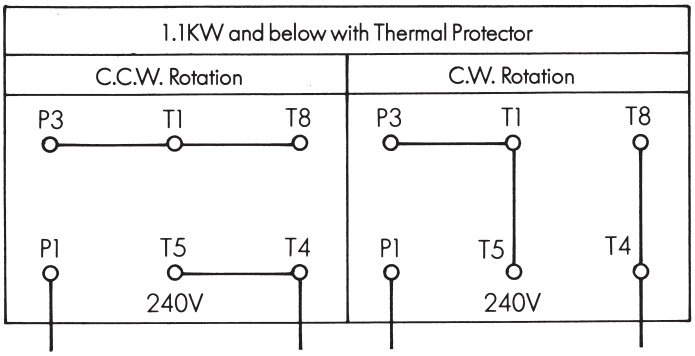

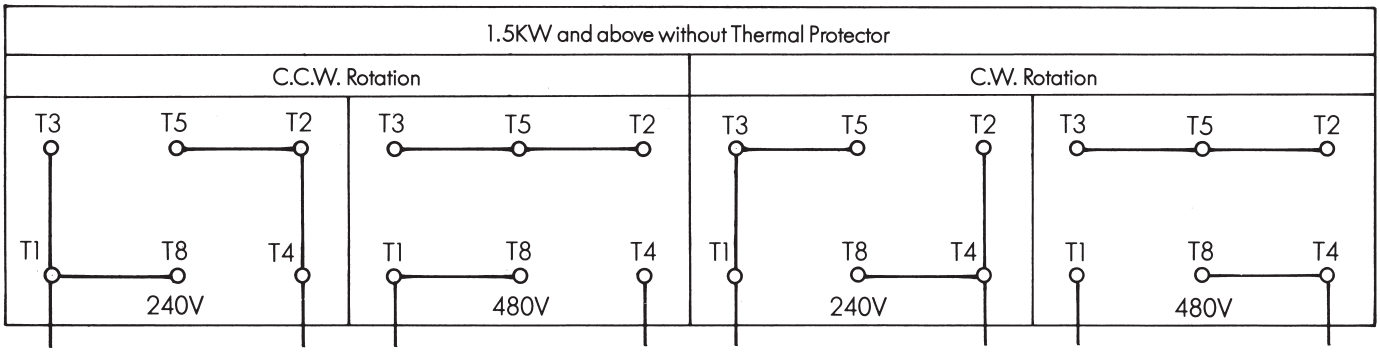

To change rotation, connect links as in diagrams above

Performance Data

Rated output kW	Frame size	Speed RPM	Effic-iency %	Power factor cosφ	Current: Full load I_N A 240V	Current: Full load I_N A 480V	Current: Starting $\frac{I_{st}}{I_N}$ 240V	Current: Starting $\frac{I_{st}}{I_N}$ 480V	Torque: Full load T_N Nm	Torque: Starting $\frac{T_{st}}{T_N}$	Torque: Break down $\frac{T_b}{T_N}$	Capacitor: Start μF	Capacitor: Start Vac	Capacitor: Run μF	Capacitor: Run Vac
2 Pole															
0.25	A71	2880	65.9	0.80	1.96	–	5.1	–	0.78	2.6	2.8	40	250	4	440
0.37	A71	2870	72.4	0.81	2.66	–	4.9	–	1.27	2.3	2.3	50	250	5	440
0.55	B71	2865	73	0.86	3.74	–	5.9	–	1.86	2.7	2.4	80	250	8	440
0.75	80	2900	74	0.87	4.84	–	7	–	2.45	3.2	2.8	100	250	10	440
1.1	80	2880	75.5	0.94	6.6	–	6.5	–	3.6	2.4	2.5	125	250	15	440
1.5	90S	2910	77.5	0.89	9	4.5	7	7	4.9	2.3	2.6	125	250	15	440
2.2	90L	2895	77.9	0.92	13.1	6.6	6.7	6.7	7.3	2.1	2.5	150	250	20	440
3	100L	2875	75.6	0.92	18	9	5.9	5.9	10	2.5	2.3	250	250	30	440
4	112M	2900	74.6	0.93	25	12.5	5.5	5.5	13.1	1.6	2.2	300	250	30	440
5.5	132S	2930	79.2	0.96	30	15	8	8	18	2.8	2.6	560	330	60	440
7.5	132S	2930	81.2	0.99	40	20	6.8	6.8	24.5	2.4	2.3	720	330	100	440
4 Pole															
0.18	A71	1430	63.5	0.72	1.7	–	4.7	–	1.18	2.7	2.4	40	250	4	440
0.25	A71	1420	64.3	0.75	2.12	–	4.7	–	1.66	2.3	2.3	40	250	4	440
0.37	B71	1415	68.7	0.78	2.9	–	5.2	–	2.45	2.2	2.3	70	250	6	440
0.55	80	1425	70.1	0.77	4.3	–	5.1	–	3.7	2.6	1.8	80	250	8	440
0.75	80	1425	72.1	0.86	5	–	5.8	–	5	2.5	2.2	100	250	12	440
1.1	90S	1445	69.6	0.76	8.8	–	5.1	–	7.3	2.2	2.2	125	250	15	440
1.5	90L	1450	72.8	0.82	10.4	5.2	5.8	5.8	9.9	2.4	2.2	150	250	15	440
2.2	100L	1455	76.4	0.92	13.3	6.7	5.7	5.7	14.4	1.8	2.2	200	250	25	440
3	100L	1445	76.7	0.93	17.5	8.8	6	6	19.8	2.1	2.2	250	250	30	440
4	112M	1440	79	0.87	25	12.5	5.4	5.4	26.5	1.9	2.1	300	250	30	440
5.5	132S	1465	80.5	0.88	33	16.5	5.9	5.9	36	2.5	2.2	560	330	60	440
7.5	132M	1455	80.5	0.92	42	21	5.3	5.3	49	2.1	1.8	720	330	100	440
2 Pole															
0.75	B56	2910	69.5	0.79	5.8	–	6.3	–	2.45	2.9	2.8	100	250	–	–
4 Pole															
0.25	B56	1460	60.4	0.54	3.2	–	4.8	–	1.66	3.9	3.3	50	250	–	–
0.37	B56	1450	59.4	0.60	4.5	–	5	–	2.45	3.9	3.1	70	250	–	–
0.55	B56	1440	64.8	0.70	5.4	–	4.4	–	3.7	3.2	2.3	80	250	–	–
0.75	B56	1450	69.9	0.77	6	–	5.2	–	5	2.7	2.5	100	250	10	440

Start Run

1kW = 1.34HP
1HP = 0.746kW
1Nm = 0.102kgmf

$\frac{I_{st}}{I_N}$ = Starting Current/Nominal F.L. Current

$\frac{T_{st}}{T_N}$ = Starting Torque/Nominal F.L. Torque

$\frac{T_b}{T_N}$ = Break down Torque/Nominal F.L. Torque

Efficiency and Power Factor:

Tolerances according to IEC 34-1 and AS 1359.60

Efficiency – 15 (1-n)% when $P_2 \leq 50$kW

Power factor cosφ – $\frac{1-\cos\varphi}{6}$ Min. 0.02 Max. 0.07

Torque T_N = $\frac{9550 \times kW}{RPM}$ Nm

Note: Data subject to change without notice

Foot Mounted Motors IM 1001

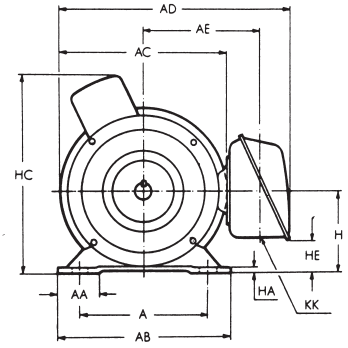

Figure 1

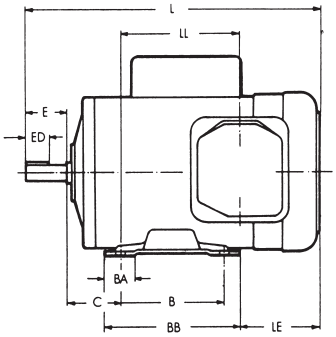

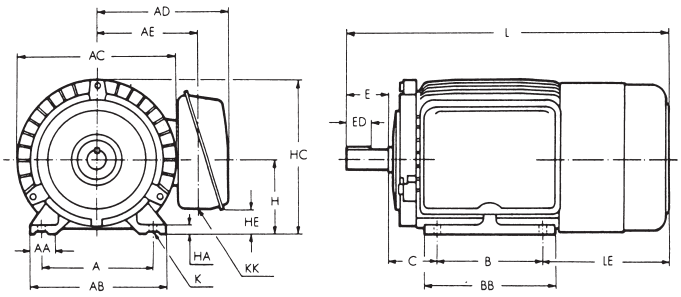

Figure 2

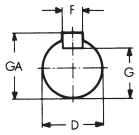

Figure 3

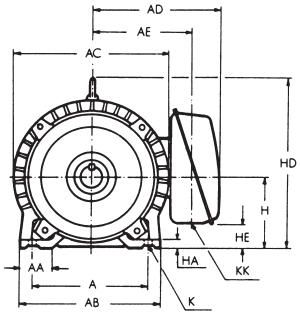

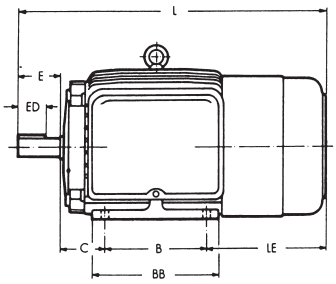

Figure 4

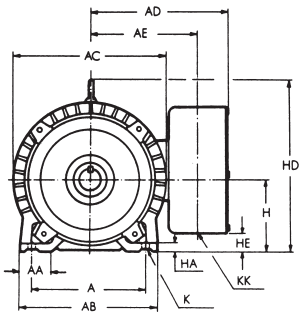

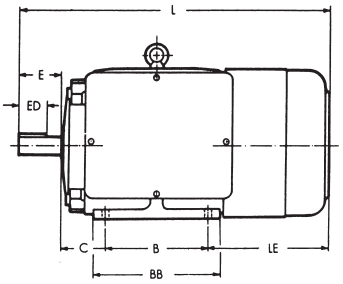

SERIES	FRAME	kW 2P	kW 4P	FIG.	A	AA	AB	AC	AD	AE	B	BA	BB	C	H	HA	HC	HD	HE	K	KK
BEGY	A71	0.25	0.18	1	112	40	150	144	114	86	90	30	120	45	71	3.2	177		31	10	22
		0.37	0.25														182				
	B71		0.37		112	40	150	144	114	86	90	30	120	45	71	3.2	182		31	10	22
		0.55															187				
	80	0.75	0.55	1	125	40	165	163	122	94	100	30	130	50	80	3.2	205		40	10	22
			0.75																		
		1.1															211				
BECY	90S	1.5	1.1	2	140	35.5	170	200	170	128	100		130	56	90	10	190		17	10	22
	90L	2.2	1.5								125		150								
	100L	3.0	2.2	3	160	45	195	219	180	138	140		175	63	100	12.5		243	27	12	22
			3.0																		
	112M	4.0	4.0	3	190	45	224	238	236	147	140		175	70	112	14		265	39	12	22
	132S	5.5	5.5	4	216	45	250	273	294	192	140		175	89	132	16		310	54	12	22
		7.5																			
	132M		7.5								170		212								

SERIES	FRAME	kW 2P	kW 4P	FIG.	L	LE	LL	Z	SHAFT END D	SHAFT END E	SHAFT END ED	SHAFT END F	SHAFT END G	SHAFT END GA	BEARING D-END	BEARING ND-END	APPR. KG 2P	APPR. KG 4P
BEGY	A71	0.25	0.18	1	269	104	104	20	14	30	14	5	11	16	6202 ZZ	6202 ZZ	7.5	7.5
		0.37	0.25														8.3	8.5
	B 71		0.37		287	122	122	20	14	30	14	5	11	16	6202 ZZ	6202 ZZ		10
		0.55															9.7	
	80	0.75	0.55	1	307	117	123	20	19	40	25	6	15.5	21.5	6204 ZZ	6202 ZZ	13.5	12
			0.75															14
		1.1															15.5	
BECY	90S	1.5	1.1	2	367	161			24	50	32	8	20	27	6205 ZZ	6205 ZZ	24.5	23
	90L	2.2	1.5		392												31	26.8
	100L	3.0	2.2	3	431	168			28	60	40	8	24	31	6206 ZZ	6305 ZZ	35	36
			3.0															39
	112M	4.0	4.0	3	449	179			28	60	40	8	24	31	6306 ZZ	6306 ZZ	43.2	47.4
	132S	5.5	5.5	4	508	199			38	80	56	10	33	41	6308 ZZ	6306 ZZ	77	75
		7.5															80	
	132M		7.5		546													81

Dimensions in mm. Design, data and dimensions are subject to modification without notice.

Flange Mounted Motors IM 3001

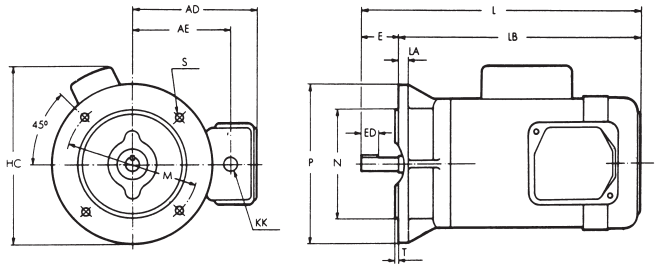

Figure 1

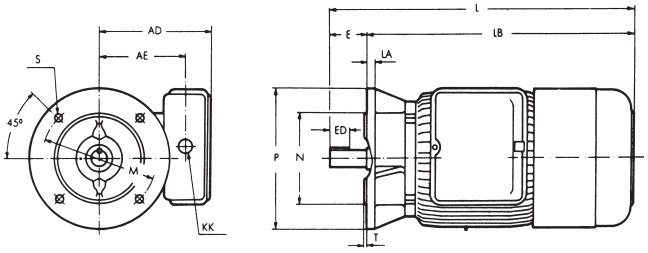

Figure 2

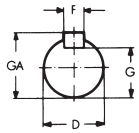

Figure 3

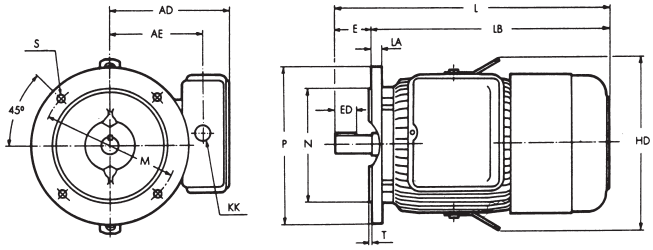

Tolerances:

D = <28-j6, 38k6
F = h9
H = +0 −0.5
N = js6

SERIES	FRAME	kW 2P	kW 4P	FIG.	AD	AE	HB	HC	KK	L	LA	LB	M	N	P	S	T
BETY	A71	0.25	0.18	1	114	86		180	22	294	10	271	115	95	140	10	3
			0.25					186		301			130	110	160		3.5
		0.37						191									
	B71		0.37		114	86		191	22	319	10	289	130	110	160	10	3.5
		0.55						196									
	80	0.75	0.55	1	122	94		225	22	325	12	295	165	130	200	12	3.5
			0.75							335		315					
		1.1						231									
BEDY	90S	1.5	1.1	2	170	128			22	406	12	356	165	130	200	12	3.5
	90L	2.2	1.5							431		381					
	100L	3.0	2.2	3	180	138	280		22	431	16	371	215	180	250	15	4
			3.0														
	112M	4.0	4.0	3	236	147	300		22	489	16	429	215	180	250	15	4
	132S	5.5	5.5	3	294	192	336		22	508	20	428	265	230	300	15	4
		7.5															
	132M		7.5							546		466					

SERIES	FRAME	kW 2P	kW 4P	FIG.	SHAFT END D	E	ED	F	G	GA	BEARING D-END	ND-END
BETY	A71	0.25	0.18	1	11	23	10	4	8.5	12.5	6202 ZZ	6202 ZZ
			0.25		14	30	14	5	11	16		
		0.37										
	B71		0.37		14	30	14	5	11	16	6202 ZZ	6202 ZZ
		0.55										
	80	0.75	0.55	1	19	40	25	6	15.5	21.5	6204 ZZ	6202 ZZ
			0.75									
		1.1										
BEDY	90S	1.5	1.1	2	24	50	32	8	20	27	6205 ZZ	6205 ZZ
	90L	2.2	1.5									
	100L	3.0	2.2	3	28	60	40	8	24	31	6206 ZZ	6305 ZZ
			3.0									
	112M	4.0	4.0	3	28	60	40	8	24	31	6306 ZZ	6306 ZZ
	132S	5.5	5.5	3	38	80	56	10	33	41	6308 ZZ	6306 ZZ
		7.5										
	132M		7.5									

Dimensions in mm. Design, data and dimensions are subject to modification without notice.

Foot and Flange Mounted Motors IM 2001

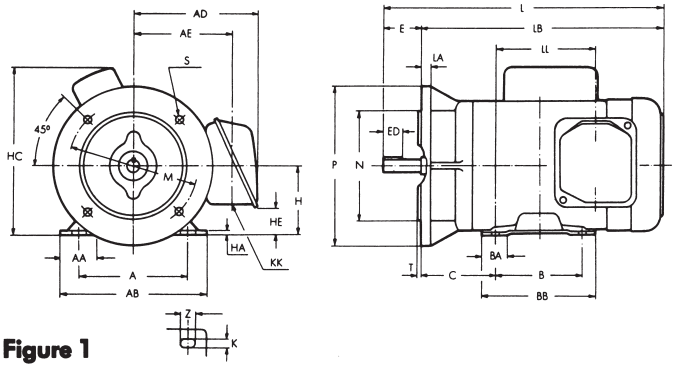

Figure 1

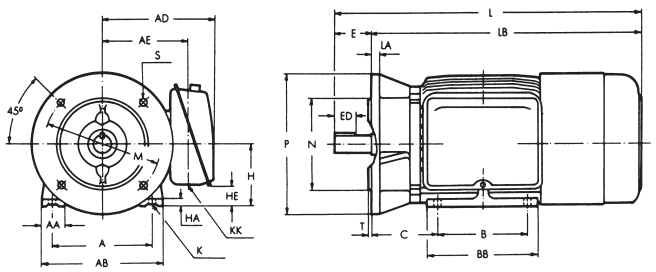

Figure 2

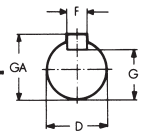

Figure 3

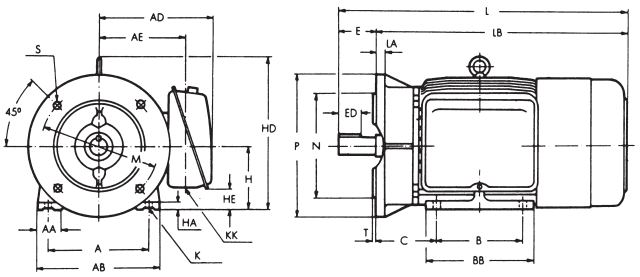

Figure 4

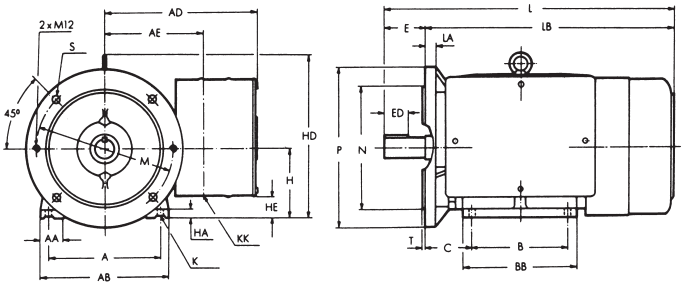

SERIES	FRAME	kW 2P	kW 4P	FIG.	A	AA	AB	AD	AE	B	BA	BB	C	H	HA	HC	HD	HE	K	KK	L	LA	LB
BEGY	A71	0.25	0.18	1	112	40	150	114	86	90	30	120	77	71	3.2	177		31	10	22	301	10	271
			0.25																				
		0.37														182							
	B71		0.37		112	40	150	114	86	90	30	120	77	71	3.2	182		31	10	22	319	10	289
		0.55														187							
	80	0.75	0.55	1	125	40	165	122	94	100	30	130	77.5	80	3.2	205		40	10	22	335	12	295
			0.75																		355		315
		1.1														211							
BECY	90S	1.5	1.1	2	140	35.5	170	170	128	100		130	95	90	10			17	10	22	406	12	356
	90L	2.2	1.5							125		150									431		381
	100L	3.0	2.2	3	160	45	195	180	138	140		175	103	100	12.5		243	27	12	22	471	16	411
			3.0																				
	112M	4.0	4.0	3	190	45	224	236	147	140		175	110	112	14		265	39	12	22	489	16	429
	132S	5.5	5.5	4	216	45	250	294	192	140		175	139	132	16		310	54	12	22	558	20	478
		7.5																					
	132M		7.5							178		212									596		516

SERIES	FRAME	kW 2P	kW 4P	FIG.	LL	M	N	P	S	T	Z	SHAFT END D	SHAFT END E	SHAFT END ED	SHAFT END F	SHAFT END G	SHAFT END GA	BEARING D-END	BEARING ND-END
BEGY	A71	0.25	0.18	1	104	130	110	160	10	3.5	20	14	30	14	5	11	16	6202 ZZ	6202 ZZ
			0.25																
		0.37																	
	B71		0.37		122	130	110	160	10	3.5	20	14	30	14	5	11	16	6202 ZZ	6202 ZZ
		0.55																	
	80	0.75	0.55	1	123	165	130	200	12	3.5	20	19	40	25	6	15.5	21.5	6204 ZZ	6202 ZZ
			0.75		143														
		1.1																	
BECY	90S	1.5	1.1	2		165	130	200	12	3.5		24	50	32	8	20	27	6205 ZZ	6205 ZZ
	90L	2.2	1.5																
	100L	3.0	2.2	3		215	180	250	15	4		28	60	40	8	24	31	6206 ZZ	6305 ZZ
			3.0																
	112M	4.0	4.0	3		215	180	250	15	4		28	60	40	8	24	31	6306 ZZ	6306 ZZ
	132S	5.5	5.5	4		265	230	300	15	4		38	80	56	10	33	41	6308 ZZ	6306 ZZ
		7.5																	
	132M		7.5																

Dimensions in mm. Design, data and dimensions are subject to modification without notice.

B56 Series

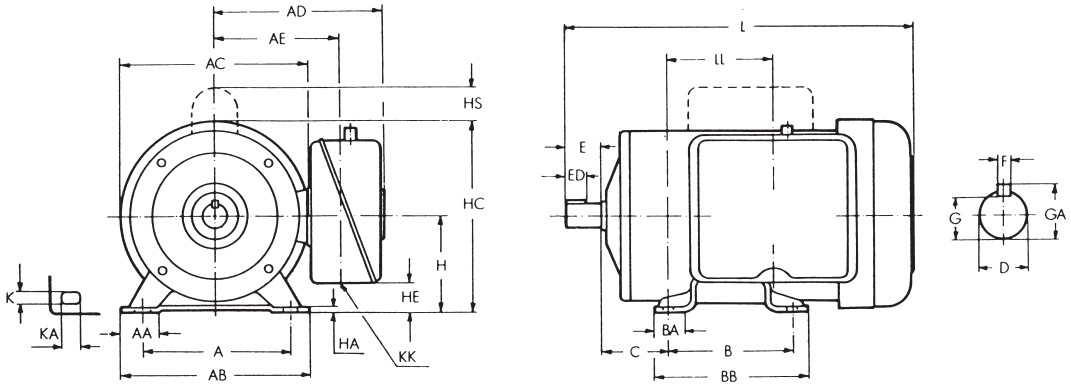

FRAME	kW 2P	kW 4P	A	AA	AB	AC	AD	AE	B	BA	BB	C	H	HA	HC	HE	HS	K	KA
B56		0.25	124	39	162	185	245	110	76	37	127	70	88.9	4	181	24	–	8.7	17.5
		0.37																	
	0.75	0.55	124	39	162	185	245	110	76	37	127	70	88.9	4	181	24	–	8.7	17.5
		0.75															42.4		

FRAME	kW 2P	kW 4P	KK	L	LL	SHAFT END D	SHAFT END E	SHAFT END ED	SHAFT END F	SHAFT END G	SHAFT END GA	BEARING D-END	BEARING ND-END	APPR. KG
B56		0.25	22	320	10g	5/8''	47.6	35.8	3/16''	13	17.8	6205 ZZ	6203 ZZ	13.2
		0.37												14.5
	0.75	0.55	22	337	10g	5/8''	47.6	35.8	3/16''	13	17.8	6205 ZZ	6203 ZZ	15.9
		0.75												17.3

Spare Parts List

TYPE	kW – P	CENTRIFUGAL SWITCH	CAPACITOR START	CAPACITOR RUN	THERMAL OVERLOAD	BEARINGS D-END	BEARINGS ND-END
BEGYBS	0.18kW – 4P	TS1RA4517	40uf 250V AC	4uf 440V AC	MRA 68164	6202 ZZ	6202 ZZ
	0.25kW – 2P	TS1RA2517	40uf 250V AC	4uf 440V AC	MRA 68163	6202 ZZ	6202 ZZ
	0.25kW – 4P	TS1RA4517	40uf 250V AC	4uf 440V AC	MRA 68163	6202 ZZ	6202 ZZ
	0.37kW – 2P	TS1RA2517	50uf 250V AC	5uf 440V AC	MRA 68225	6202 ZZ	6202 ZZ
	0.37kW – 4P	TS1RA4517	70uf 250V AC	6uf 440V AC	MRA 68225	6202 ZZ	6202 ZZ
	0.55kW – 2P	TS1RA2517	80uf 250V AC	8uf 440V AC	MRA 68223	6202 ZZ	6202 ZZ
	0.55kW – 4P	TS1RA4517	80uf 250V AC	8uf 440V AC	MRA 68223	6204 ZZ	6202 ZZ
	0.75kW – 2P	TS1RA2517	100uf 250V AC	10uf 440V AC	MRA 68363	6204 ZZ	6202 ZZ
	0.75kW – 4P	TS1RA4517	100uf 250V AC	12uf 440V AC	MRA 68363	6204 ZZ	6202 ZZ
	1.1kW – 2P	TS1RA2517	125uf 250V AC	15uf 440V AC	MRA 68364	6204 ZZ	6202 ZZ
BECYBS	1.1kW – 4P	TS2RB4524	125uf 250V AC	15uf 440V AC	MEJ 20RB	6205 ZZ	6205 ZZ
	1.5kW – 2P	TS2RB2524	150uf 250V AC	15uf 440V AC	MEJ 22AB	6205 ZZ	6205 ZZ
	1.5kW – 4P	TS2RB4524	150uf 250V AC	15uf 440V AC	MEJ 22AB	6205 ZZ	6205 ZZ
	2.2kW – 2P	TS2RB2524	150uf 250V AC	20uf 440V AC	–	6205 ZZ	6205 ZZ
	2.2kW – 4P	TS2RB4524	200uf 250V AC	25uf 440V AC	–	6206 ZZ	6305 ZZ
	3kW – 2P	TS2RB2524	250uf 250V AC	15uf 440V ACx2	–	6206 ZZ	6305 ZZ
	3kW – 4P	TS2RB4524	250uf 250V AC	15uf 440V ACx2	–	6206 ZZ	6305 ZZ
	4kW – 2P	TS2RB2524	150uf 250V ACx2	15uf 440V ACx2	–	6306 ZZ	6306 ZZ
	4kW – 4P	TS2RB4524	150uf 250V ACx2	15uf 440V ACx2	–	6206 ZZ	6306 ZZ
	5.5kW – 4P	TS3RB4524	145-174uf 330V ACx4	15uf 440V ACx4	–	6308 ZZ	6306 ZZ
	7.5kW – 4P	TS3RB4524	189-226uf 330V ACx4	25uf 440V ACx4	–	6308 ZZ	6306 ZZ
	5.5kW – 2P	TS3RB2524	560uf 330V AC	60uf 440V AC	–	6308 ZZ	6306 ZZ
	7.5kW – 2P	TS3RB2524	720uf 330V AC	100uf 110V AC	–	6308 ZZ	6306 ZZ
BEGCFB	0.25kW – 4P	TS1RA4520	50uf 250V AC	–	MEP 40LD	6205 ZZ	6203 ZZ
	0.37kW – 4P	TS1RA4520	70uf 250V AC	–	MEP 40LD	6205 ZZ	6203 ZZ
	0.55kW – 4P	TS1RA4520	80uf 250V AC	–	MEJ 28DB	6205 ZZ	6203 ZZ
	0.75kW – 2P	TS1RA2520	100uf 250V AC	–	MEJ 28DB	6205 ZZ	6203 ZZ
BEGSFB	0.75kW – 4P	TS1RA4520	100uf 250V AC	10uf 440V AC	MEJ 28DB	6250 ZZ	6203 ZZ

Dimensions in mm. Design, data and dimensions are subject to modification without notice.